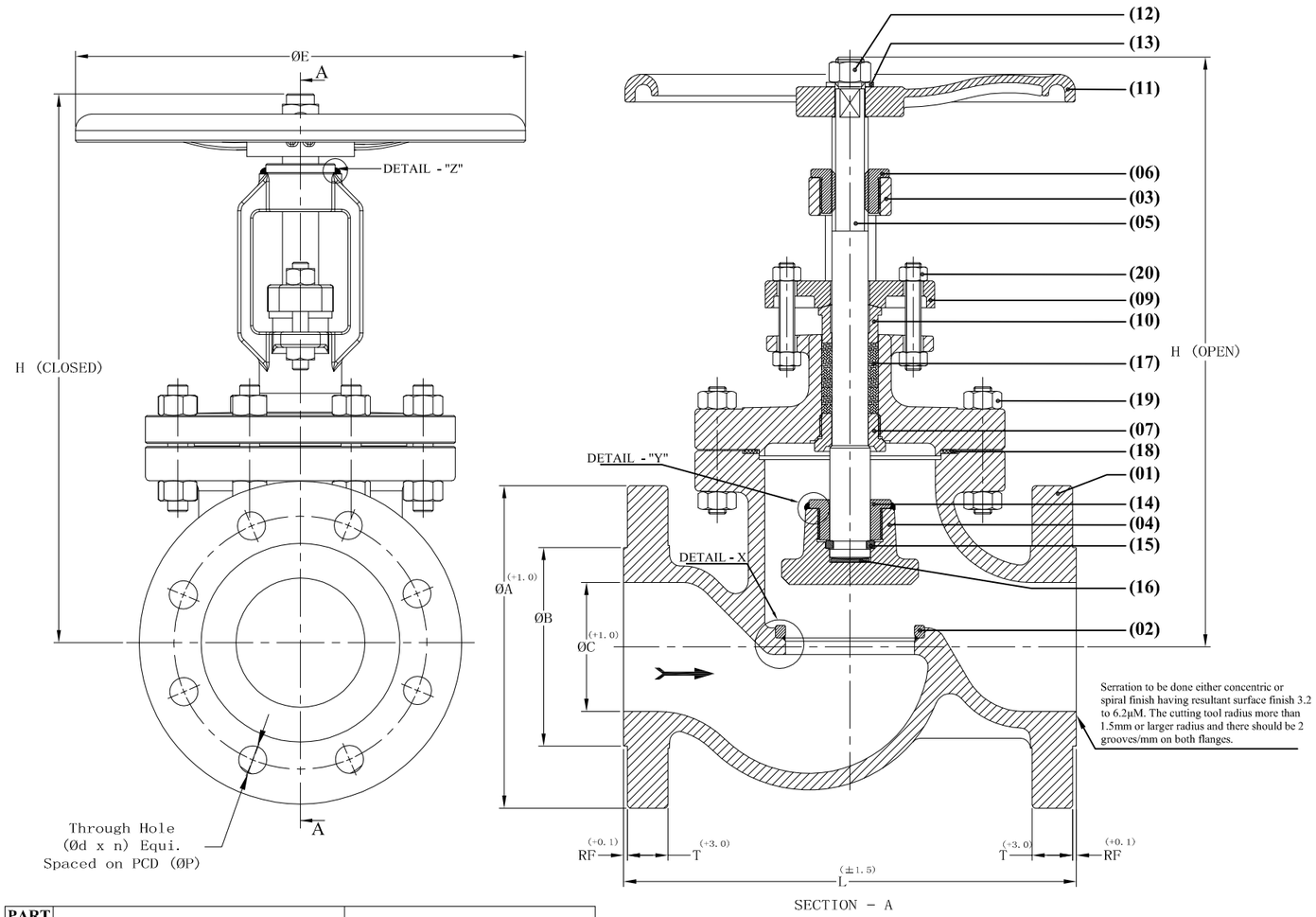

SL No.	SIZE	CLASS	INSIDE DIAMETER	FACE to FACE	FLANGE DIMENSIONS				FLANGE HOLE DIMENSIONS			HEIGHT(H)		HAND WHEEL DAIMETER
			ØC	Length (L)	Flange OD (ØA)	Raised Face OD (ØB)	Raised Face (RF)	Thick (T)	PCD (ØP)	Drill Hole Dia (Ød)	No. of Drill Holes (n)	CLOSE	OPEN	(ØE)
1	2" DN50	150#	Ø52	203	Ø150	Ø92 ± 1	2	17.5	Ø120.7	Ø19	4	290	312	Ø203
2		300#	Ø52	267	Ø165	Ø92 ± 1	2	20.7	Ø127	Ø19	8	310	333.5	Ø203
3		600#	Ø52	292	Ø165	Ø92 ± 0.5	7	25.4	Ø127	Ø19	8	321.5	343	Ø254
4	3" DN80	150#	Ø76	241	Ø190	Ø127 ± 1	2	22.3	Ø152.4	Ø19	4	338	364.5	Ø254
5		300#	Ø76	318	Ø210	Ø127 ± 1	2	27	Ø168.3	Ø22.2	8	330	390	Ø254
6		600#	Ø76	356	Ø210	Ø127 ± 0.5	7	31.8	Ø168.3	Ø22.3	8	400.5	429.5	Ø356
7	4" DN100	150#	Ø102	292	Ø230	Ø157 ± 1	2	22.3	Ø190.5	Ø19	8	404	439	Ø356
8		300#	Ø102	356	Ø255	Ø157 ± 1	2	30.2	Ø200	Ø22.2	8	431	467.5	Ø356
9		600#	Ø102	432	Ø275	Ø157 ± 0.5	7	38.1	Ø216	Ø25.4	8	448	485.5	Ø356
10	6" DN150	150#	Ø153	406	Ø280	Ø216 ± 1	2	23.9	Ø241.3	Ø22.2	8	466	521.5	Ø356
11		300#	Ø153	444	Ø320	Ø216 ± 1	2	35	Ø270	Ø22.2	12	509	557	Ø457
12		600#	Ø152	559	Ø355	Ø216 ± 0.5	7	47.7	Ø292	Ø28.5	12	642.6	700	Ø508
13	8" DN200	150#	Ø203	495	Ø345	Ø270 ± 1	2	27	Ø298.5	Ø22.2	8	597	661	Ø457
14	10" DN250	150#	Ø254	622	Ø405	Ø324 ± 1	2	28.6	Ø362	Ø25.4	12	740	825	Ø508

PART No.	PART NAME	MATERIAL SPECIFICATION
1	Body	ASTM A351 Gr.CF8M
2	Seat Ring	ASTM A182 Gr.F316
3	Bonnet	ASTM A351 Gr.CF8M
4	Disc	ASTM A351 Gr.CF8M
5	Stem	ASTM A276 Gr.316
6	Stem Nut	ASTM A439 - D2
7	Back Seat Ring	ASTM A276 Gr.316
8	Bonnet Bush (above 6" #600)	ASTM A276 Gr.316
9	Gland Flange	ASTM A351 Gr.CF8M
10	Gland Bush	ASTM A276 Gr.316
11	Hand Wheel	DUCTILE IRON
12	Hand Wheel Lock Nut	ASTM A194 Gr.2H
13	Hand Wheel Lock Nut Washer	CARBON STEEL
14	Disc Nut	ASTM A276 Gr.316
15	Split Ring	ASTM A276 Gr.316
16	Thrust Pad	ASTM A276 Gr.316
17	Stem Packing	GRAPHITE WITH INCONNELWIRE
18	Gasket	SS 316 + GRAPHITE
19	Full Thread Stud With 2 Heavy Nuts (Body & Bonnet)	STUD: ASTM A193 Gr.B8M NUT: ASTM A194 Gr.8M
20	Stud or Eye Bolt (Gland Flange)	ASTM A193 Gr.B8M or ASTM A193 Gr.B8
21	Nuts (Gland Flange)	ASTM A194 Gr.8M
22	Eye Bolt Pin (Gland Flange) (above 6" #600)	ASTM A276 Gr.316

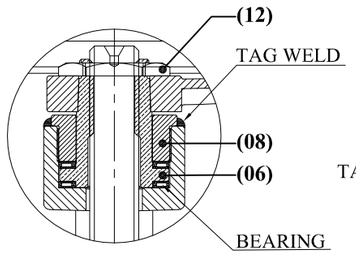

Stem Nut Changed, Bush &Bearing are Provided For 6"- #600 & Above

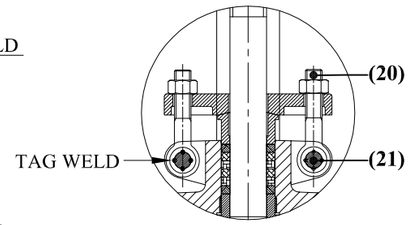

For 6" & Above Size (Gland Flange Connection)

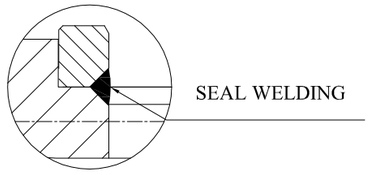

DETAIL 'X'

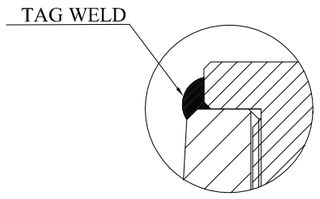

DETAIL 'Y'

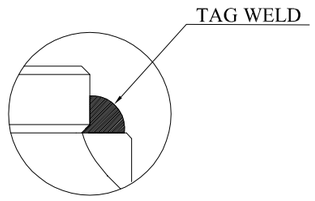

DETAIL 'Z'

Globe Valve Technical Data

SL.No	Description	Specification
1	Nominal Size	2" to 10" (150#) & 2" to 6" (300# & 600#)
2	Pressure Class	(150#, 300# & 600#)
3	Valve Standard	BS 1873: 1975 ASME B 16.34 : 2017
4	Flange Face to Face	ASME B 16.10 : 2017
5	Testing Standard	API 598 : 2016
6	Flange Standard Conformity	ANSI B 16.5 : 2017 (150#, 300# & 600#)

7	Testing Pressure				
	Class		150#	300#	600#
	Shell Test	Water	413 PSIG	1080 PSIG	2160 PSIG
	Seat Test	Air	80 PSIG	80 PSIG	80 PSIG
		Water	303 PSIG	792 PSIG	1584 PSIG
	Back Seat Test	Water	303 PSIG	792 PSIG	1584 PSIG
8	Working Pressure (Max.)		275 PSIG	720 PSIG	1440 PSIG

ALT.#	REV. #	ZONE	BRIEF RECORD	DATE

TITLE : **GLOBE VALVE - GENERAL ASSEMBLY CF8M WITH TRIM-10**

DRG. No.:	Rev.No.:	2019	SIGN	DATE			
CS-GB-GAD-0056	00	DRN	TRP	29.08.2019	WEIGHT in Kgs.	-----	SHEET No.:- 1 of 1
MAT.:- ----		CHD	PRK	30.08.2019	ALL DIMENSIONS ARE IN mm		A2
		APD	DKN	30.08.2019	SCALE :- N.T.S		